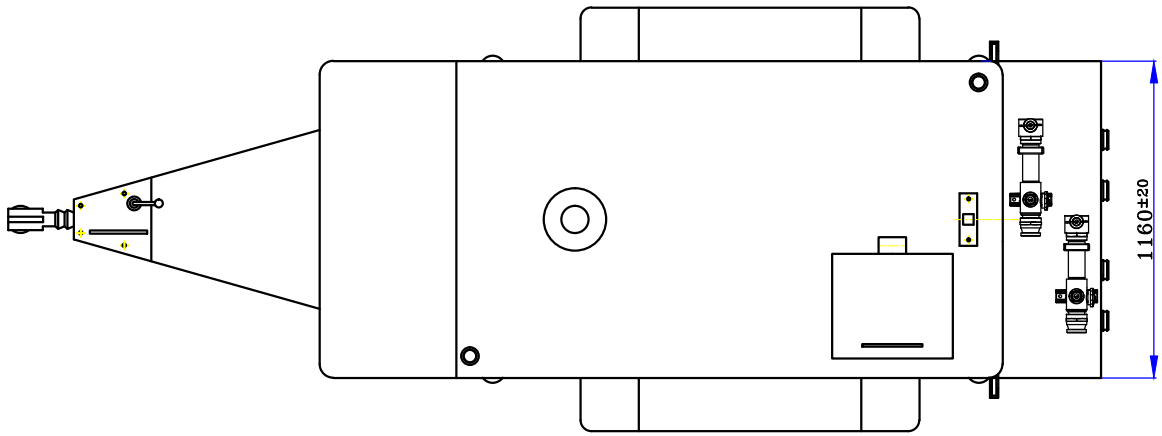

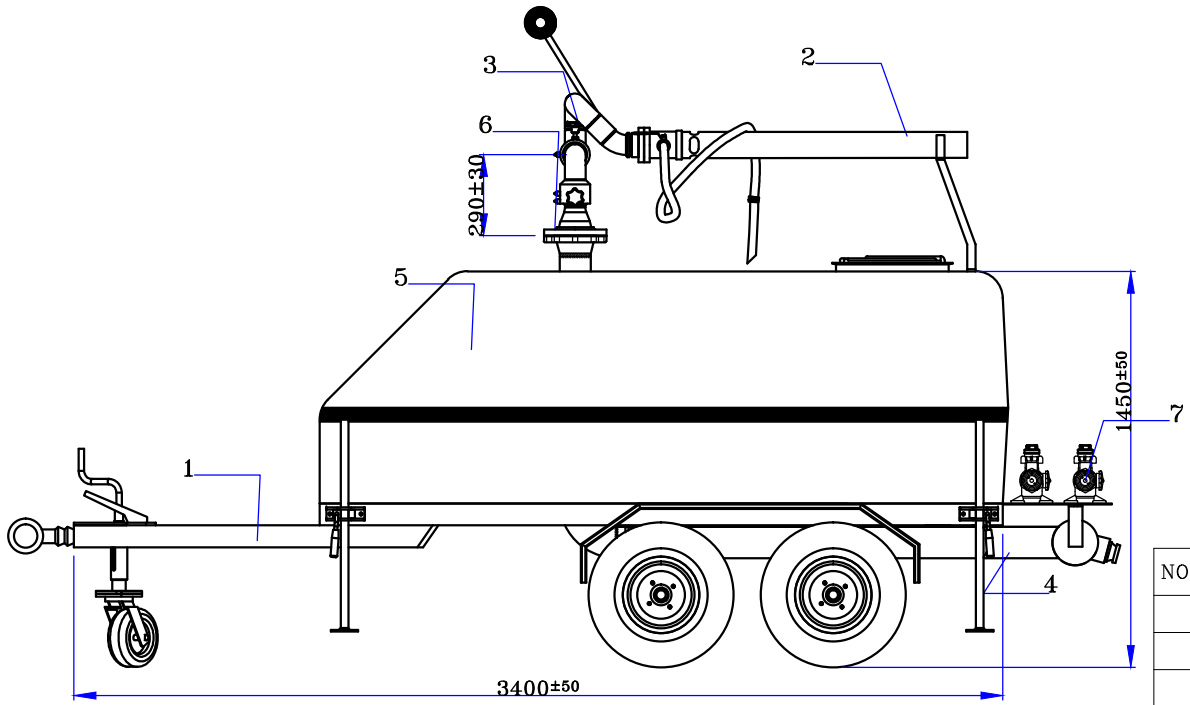

No.	Part Name	MATERIAL
1	TRAILER	CARBON STEEL
2	FOAM NOZZLE FC-2700	STAINLESS STEEL
3	MONITOR Model:TR-MW5	CARBON STEEL
4	4 x2 1/2" MALE ADAPTOR BS 336	GUNMETAL
5	FOAM TANK 2000 Lit	G.R.P
6	4" FLANGE ANSI 16.5-#150	CARBON STEEL
7	IN LINE INDUCTOR 450	BRONZE

INLET CONNECTION 4x 2 1/2" MALE ADAPTOR BS 336

FLOW RATE:
2700 LPM FOR FOAM NOZZLE @ 7 BAR

NOTE: TRAILER MONITOR MODEL: TR-TM4

Date	Design	Drawn	Checked	REV.

Part Name: Total
Drawing No: TM4-001
Material: As above chart

I.T.E

TOL.: DIN-7168m
Size: A4
Scale: -
Sheet: 1 Of 1
QTY. :1