GLOB VALVE MODEL TR-SG9

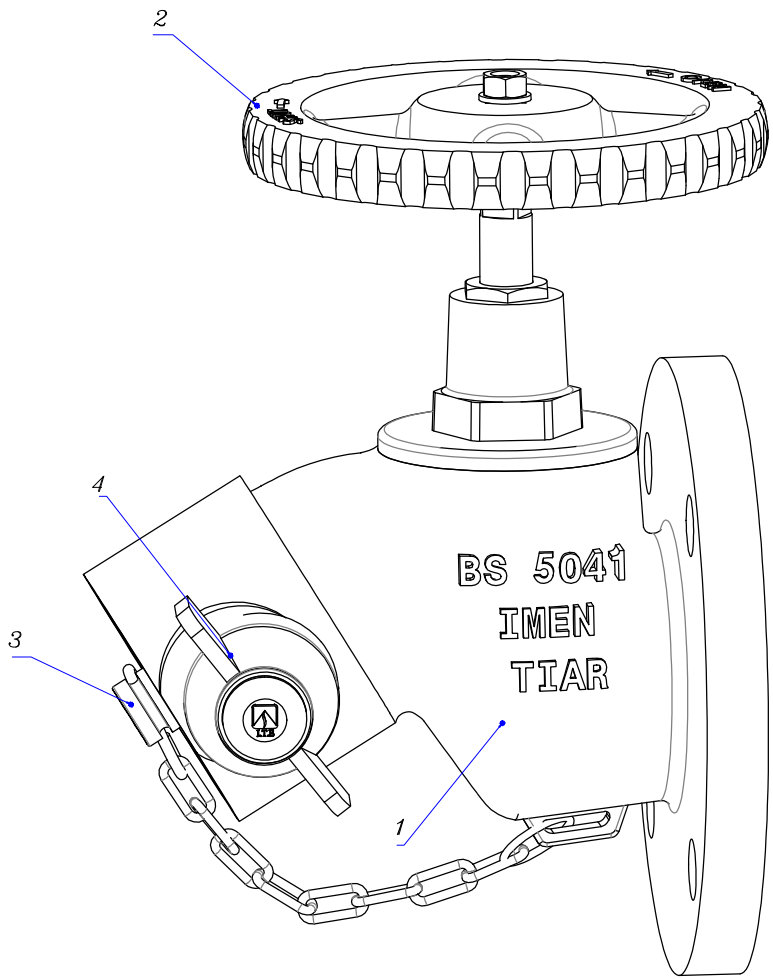

NO.	PART NAME	MATERIAL
1	BODY	GUNMETAL
2	HANDWHEEL	CAST IRON
3	CAP	PLASTIC
4	RELEASE PLANGER	BRASS

NOTE: BIB NOISE VALVE MODEL TR-SG9

Date	Design	Drawn	Checked	REV.

Part Name: TOTAL
Drawing No: SG4-001
Material: AS ABOVE CHART
PROJECT:

I.T.E

TOL.: DIN-7168m
Size: A4
Scale: 1:3
Sheet: 1 Of 1
QTY. :1