PORTABLE WATER MONITOR

Model:TR–MW1

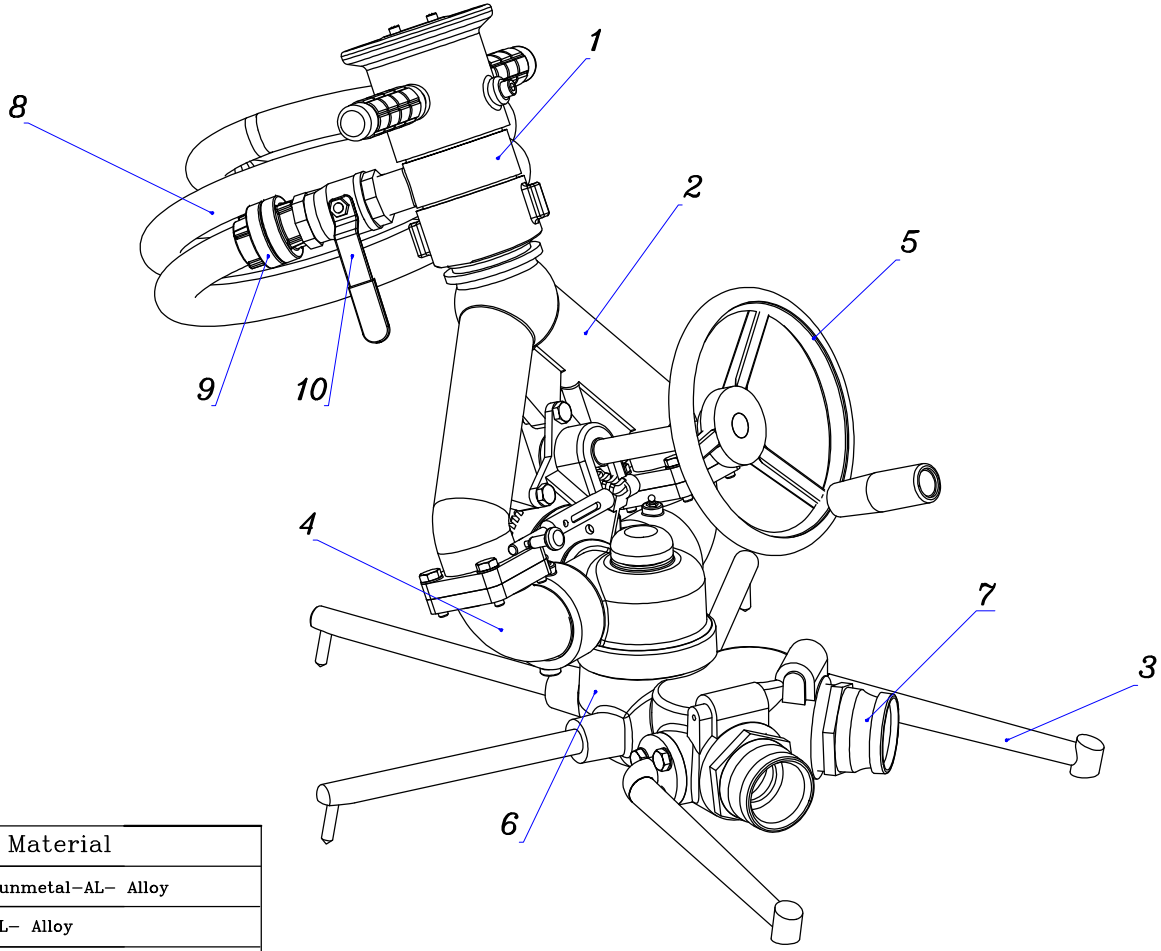

Item	Part Name	Material
1	NFM1 NAZZLE	Gunmetal–AL– Alloy
2	Y BODY	AL– Alloy
3	LEGS	D.CAST IRON & CARBON STEEL
4	ELBOW	AL– Alloy
5	Hand Wheel	AL– Alloy
6	Manifold	AL– Alloy
7	ADAPTOR	AL– Alloy
8	PICK UP TUBE	SPRING REINFORCED SUCTION TUBY
9	STORZE	AL–ALLOY
10	BALL VALVE	BRASS/S.STEEL

NOTE: PORTABLE WATER MONITOR MODEL: TR–MW1

Date	Design	Drawn	Checked	REV.

Part Name: Total

Drawing No: MW1–001

Material: As above chart

PROJECT:

I.T.E

TOL.: DIN–7168m

Size: A4

Scale:1:5

Sheet: 1 Of 1

QTY. :